SH639-120A

120A 3 PHASE LATCHING RELAY

Contact Specifications:

1. Contact Form: 3A(Release), 3B(Operate) Default Form
2. Contact Material: $AgSnO_2$
3. Contact Resistance:
   ≤2 mΩ（1A/6VDC）

Characteristics:

AMBIENT TEMP.		-40℃～+70℃
VIBRATION RESISTANCE		10-55Hz, 0.5mm (Double Amplitude)
SHOCK RESISTANCE		98m/s^2 11ms
RELATIVE HUMIDITY		45%~85%
INSULATION RESISTANCE		1000 MΩ (500VDC)
DIELECTRIC STRENGTH	BETWEEN CONTACTS	2500 VAC 50/60Hz (1 minute)
	BETWEEN CONTACT & COIL	4000 VAC 50/60Hz (1 minute)
	BETWEEN CONTACTS & CONTACT	6000 VAC 50/60Hz (1 minute)
Contact Gap		0.8±0.05mm
Electrical Life		≥1 x 10^{4}OPS
Mechanical Life		≥5 x 10^{5}OPS
PICK-UP TIME (At rated Voltage): ≤50ms		
RELEASE TIME (At rated Voltage): ≤50ms		
Bounce Time: ≤2ms		
Construction: DUST protected		
N.W. per unit: Approx. 250g		

Features:

Switching Current: 120A max
Switching Voltage: 250VAC max
Switching power: 30000VA max
Dielectric Strength: 4kV/1min
(between coil and contacts)
RoHS Compliance,
Dimensions (mm): 117×52×28

Coil Data (23°C):

Rated Voltage (VDC)	Pick-up Voltage (VDC)	Pulse Duration (ms) Min	COIL RESISTANCE X (1±10%) Ω	
9	6.75	80	Single Coil Latching	32
12	9	80		57
24	18	80		230
48	36	80		920
9	6.75	80	Double Coil Latching	16
12	9	80		29
24	18	80		115
48	36	80		460
Coil Power Consumption: Single coil 2.5W Double Coil 5.0W				

NOTICE:

1. Relay is on the “release” or “operate” status when being released from stock, with the consideration of shock risen from transit an relay mounting, relay would be changed to “operate” or “release” status, therefore, when application (connecting the power supply),please reset the relay to “operate” or “release” status on request.
2. In order to maintain “operate” or “release” status, energized voltage to coil should reach the rated voltage, impulse width should be 5 times more than “operate” or “release” time. Do not energize voltage to “operate” coil and “release” coil simultaneously. And also long energized time (more than 1 min) should be avoided.

Ordering Instruction:

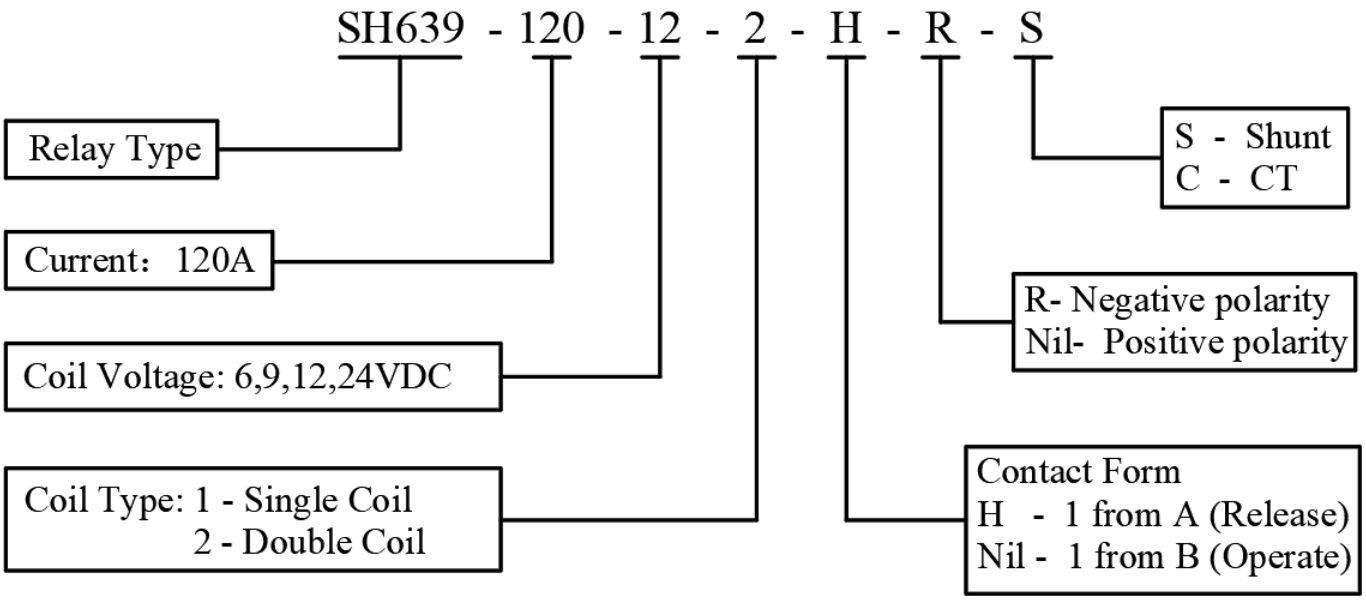

Wiring Diagram:

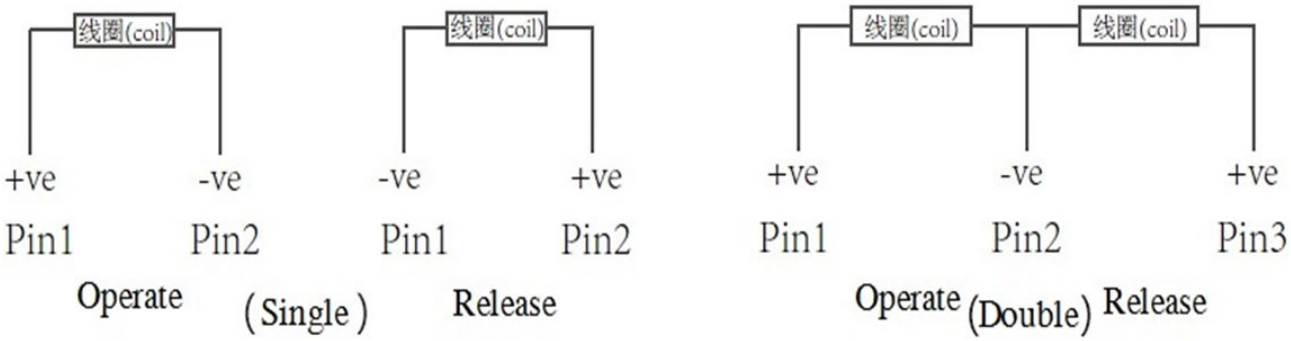

Outline Dimensions (mm):

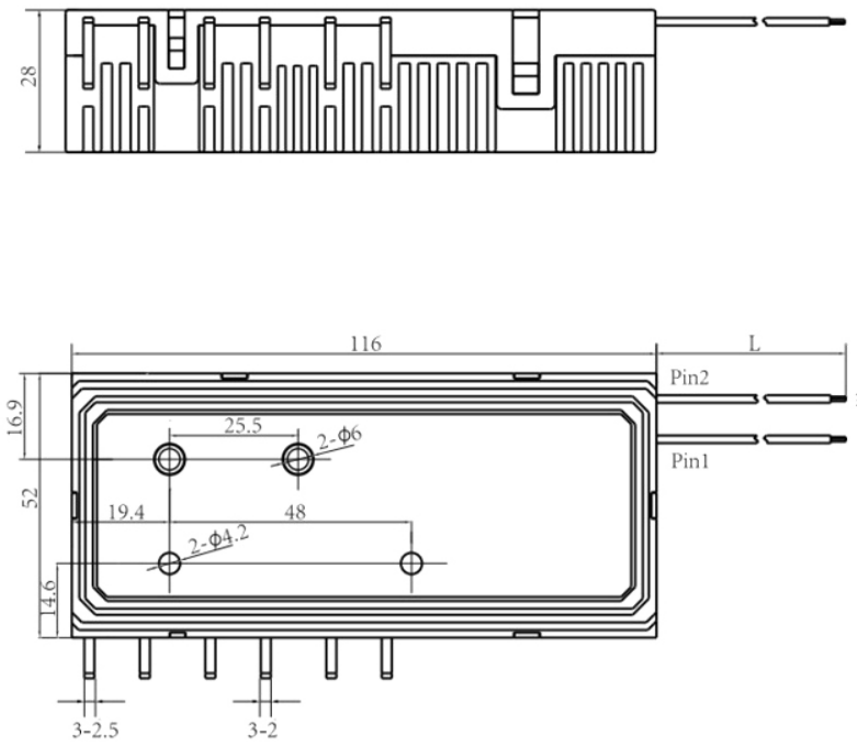

Single Coil

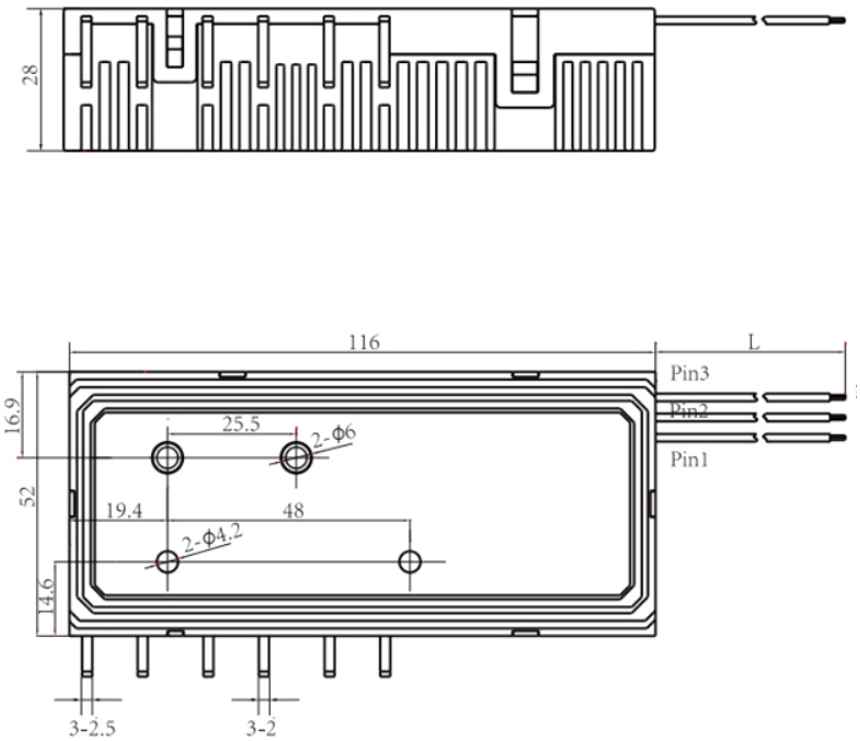

Double Coil